BATTERY MODULE

- Long Life Battery: 10 to 12 years according to EUROBAT
- Small mounting footprint
- Easy access to the terminals and the fuse
- Heavy duty fuse holder and spare fuse included
- 3 year warranty, except for batteries, which are considered a service part.

PRODUCT DESCRIPTION

The UZK12.261 battery module utilizes one non-spillable maintenance-free VRLA lead-acid battery, which is assembled in a package with all wiring and fusing included.

The battery module is available in two different options. It can be ordered as UZK-module with a battery or as UZO-module without a battery which can be installed at a later date to avoid outdated batteries.

SHORT-FORM DATA

Nominal voltage	DC 12V	
Nominal battery capacity	26Ah	
Nominal battery life	10 to 12 years	According EUROBAT
Battery current	Max. 30A Max. 5.5A	Discharging current Charging current
Recommended charging voltage	13.9V 13.75V 13.6V 13.45V	At +10°C At +20°C At +30°C At +40°C
Self-discharge rate	3%/month	At +20°C
Battery fuse	30A	ATOF® 287 030 from Littelfuse.
Temperature range	-10°C to +50°C -15°C to +60°C	For charging For discharging
Size (WxHxD)	214x179x153mm	
Weight	10.1kg 700g	For UZK12.261 For UZO12.26

ORDER NUMBERS

Battery Module	**UZK12.261**	Battery module with assembled batteries
	UZO12.26	Battery module without assembled batteries
	UZB12.261	Battery replacement 12V, 26Ah

MAIN APPROVALS

For details and the complete approval list, see chapter 10

UL 61010-2-201 — IECEx — ATEX

Marine — Marine

INDEX

		Page
1.	Intended Use	3
2.	Instructions for Disposal of the Batteries	3
3.	Instructions for Battery Storage	3
4.	Installation Instructions	3
5.	Installation Instructions Hazardous Locations	4
6.	Instructions for Replacing Batteries	5
7.	Environment	5
8.	Terminals and Wiring	6
9.	Protection Features	6
10.	Approved, Fulfilled or Tested Standards	7
11.	Regulatory Product Compliance	8
12.	Physical Dimensions and Weight	9
13.	Recommendations for a Long Battery Life	10
14.	Mounting Orientations	11

The information given in this document is correct to the best of our knowledge and experience at the time of publication. If not expressly agreed otherwise, this information does not represent a warranty in the legal sense of the word. As the state of our knowledge and experience is constantly changing, the information in this data sheet is subject to revision. We therefore kindly ask you to always use the latest issue of this document (available under www.pulspower.com).

No part of this document may be reproduced or utilized in any form without our prior permission in writing.

WARNING **Risk of electrical shock, fire, personal injury or death.**

- Turn power off before working on the device. Protect against inadvertent re-powering.
- Do not modify or repair the unit.
- Use caution to prevent any foreign objects from entering the housing.
- Do not use in wet locations or in areas where moisture or condensation can be expected.
- Do not touch during power-on, and immediately after power-off. Hot surfaces may cause burns.

1. INTENDED USE

This module is designed for installation in an enclosure and is intended for the general professional use such as in industrial control, office, communication, and instrumentation equipment.

Do not use this module in equipment, where malfunction may cause severe personal injury or threaten human life.

2. INSTRUCTIONS FOR DISPOSAL OF THE BATTERIES

Always dispose batteries through a recycling organization. Optionally, batteries can be returned to the supplier or the battery manufacturer. Batteries must be completely discharged before recycling.

CAUTION: The unit contains wet cell batteries. Ventilation of the installation room in accordance with the rules of Canadian Electrical Code, part 1 is required if used in Canada.

3. INSTRUCTIONS FOR BATTERY STORAGE

Do not store batteries or battery modules at temperatures higher than 25°C or performance and lifetime may change.

Before initial use, check the last charging which is marked on the battery. If it is older than 9 months, replace the battery.

Do not store batteries longer than 9 months without charging or performance and lifetime may change. Every 9 months or whenever the open circuit voltage (OCV) falls below 12.6V, the battery module should be charged. Apply a charging voltage of 13.8V (at 25°C) for 72 hours. Batteries with an OCV below 12V should be disposed.

4. INSTALLATION INSTRUCTIONS

This device may only be installed and put into operation by qualified personnel.

This device does not contain serviceable parts, except the fuse or replacement battery. If malfunction should occur during installation or operation, first check the fuse and battery for proper functionality. If the unit is damaged or if the malfunction continues, immediately turn power off and send device to the factory for inspection.

Do not install the battery fuse until the installation work is complete.

Replacement fuses must be of the same type or an UL listed fuse with the same nominal value and characteristics.

Do not short-circuit the battery poles or power wires and always check correct battery polarity.

Mount the device onto a flat surface. Do not install the battery module upside down.

Install the device in a cool area inside an enclosure providing protection against electrical, mechanical and fire hazards. Ensure sufficient ventilation by following the requirements of the EN 50272-2.

The device is designed for pollution degree 2 areas in controlled environments. No condensation or frost allowed.

The enclosure of the device provides a degree of protection of IP00.

Do not use batteries other than the original batteries supplied by the manufacturer to avoid conflicts with agency approvals.

The maximum surrounding air temperature is +60°C (+140°F). The operational temperature is the same as the ambient or surrounding air temperature and is defined 2cm below the device. Charging is allowed up to +50°C.

Frequently charging below +5°C reduces the lifetime of the battery.

The device is designed to operate in areas between 5% and 95% relative humidity.

Fig. 4-1 **Wiring scheme**

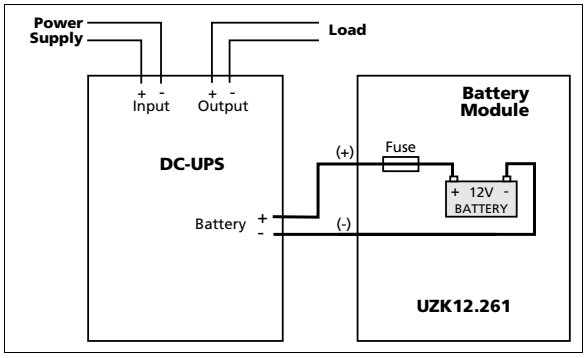

5. INSTALLATION INSTRUCTIONS HAZARDOUS LOCATIONS

The device is suitable for use in Class I Division 2 Groups A, B, C, D locations and for use in Group II Category 3 (Zone 2) environments.

Hazardous Location classification: ATEX: EPS 15 ATEX 1 025 X, II 3G Ex ec IIC T4 Gc

WARNING EXPLOSION HAZARDS!

Substitution of components may impair suitability for this environment.

Do not disconnect the unit or remove or insert the fuse or battery unless power has been switched off or the area is known to be non-hazardous.

A suitable enclosure must be provided for the end product which has a minimum protection of IP23 and fulfils the requirements of the EN 60079-0. Sufficient ventilation must be ensured in the final installation.

Do not use batteries other than the original batteries supplied by the manufacturer or batteries, which are approved according to EN/ IEC 60079-7.

6. INSTRUCTIONS FOR REPLACING BATTERIES

Batteries need to be replaced periodically. The time interval depends on the ambient temperature in which the battery is used and, on the number, and depth of discharge cycles. In a typical application it is recommended to replace the batteries at least every 5 years. Disconnect battery fuse before replacing the batteries. Do not over-tighten screws of the terminal bolts of the battery. Recommended tightening torque is 3Nm (26 lb.inch).

Regarding disposal of used batteries see chapter 2.

Fig. 6-1 **Replacing the battery**

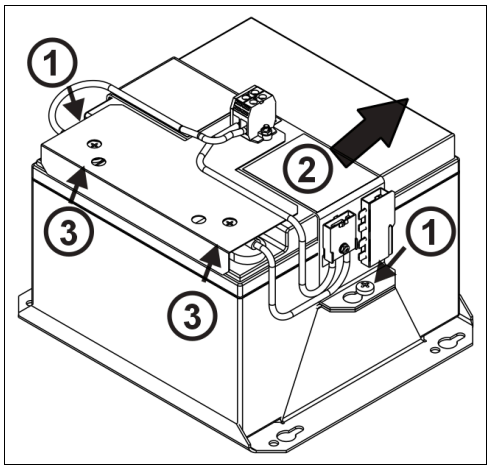

To replace battery:

1) Loosen screw with only one turn.
2) Unscrew the battery terminals.
3) Slide the mounting bracket sideways and take the mounting bracket off.
4) Remove the battery.
5) To insert the new battery, use same procedure vice versa.
   Do not over-tighten screws of the terminal bolts of the battery. Recommended tightening torque: 3Nm.

7. ENVIRONMENT

Operational temperature *)	-10°C to +50°C	For charging Frequently charging below +5°C (41°F) reduced the lifetime of the battery
	-15°C to +60°C	For discharging
Storage temperature	-20°C to +50°C	For storage and transportation Recommendation: Do not store at temperatures higher than 25°C or performance and lifetime may change.
Humidity	5 to 95% r.h.	IEC 60068-2-30 Do not energize while condensation is present
Vibration sinusoidal	±4mm at 16.7Hz fixed frequency for 1hour	Vibration in vertical mounting orientation according to IEC/EN 61056-1
Shock	free fall from 20cm onto a wooden floor	Shock with bottom down orientation according to IEC/EN 61056-1
Altitude	0 to 6000m	
Degree of pollution	2	According to IEC 62477-1, not conductive

*) Operational temperature is the same as the ambient temperature and is defined as the air temperature 2cm below the unit.

8. TERMINALS AND WIRING

The terminals are IP20 Finger safe constructed and suitable for field- and factory wiring.

	Power terminals
Type	Screw terminals
Maximal wire size, solid wire	4mm²
Maximal wire size, stranded wire	4mm²
American Wire Gauge	AWG 12-10
Maximal wire diameter	3.5mm (including ferrules)
Wire stripping length	7mm
Screwdriver	Slotted 3.5x0.5mm
Recommended tightening torque	0.5Nm

Instructions:

a) Follow national installation codes and installation regulations!
b) Ensure that all strands of a stranded wire enter the terminal connection!
c) Unused terminal compartments should be securely tightened.
d) Ferrules are allowed.

9. PROTECTION FEATURES

Degree of protection	IP00	According to EN/IEC 60529
Class of protection	III	According to EN/IEC 61140
Internal input fuse	30A	DC-Fuse (blade type) ATOF® 287 030 from Littelfuse Replacement fuses must be of the same type or an UL listed fuse with the same nominal value and characteristics.
Isolation	1100Vac	Isolation voltage between power to chassis

10. APPROVED, FULFILLED OR TESTED STANDARDS

IEC 61010-2-201 (UZK12.261)	CB Report	CB Scheme Certificate Electrical Equipment for Measurement, Control and Laboratory Use - Particular requirements for control equipment
UL 61010-2-201 (UZK12.261)	c UL us LISTED	UL Certificate Listed equipment for category NMTR - Electrical Equipment for Measurement, Control and Laboratory Use - Particular requirements for control equipment Applicable for US and Canada E-File: E198865
ATEX	Ex	Agency Certificate (Bureau Veritas) EN 60079-0 Explosive atmospheres - General requirements EN 60079-7 Equipment protection by type of protection "e" Certificate: EPS 15 ATEX 1 025 X Temperature Code: T4 Type of Protection: ec
IECEx	IECEx	IECEx Certificate IEC 60079-0 Explosive atmospheres - General requirements IEC 60079-7 Equipment protection by type of protection "e" Certificate: IECEx EPS 15.0049 X Temperature Code: T4 Type of Protection: ec
Class I Div 2	c SP us	CSA Certificate Power Supplies for Hazardous Location Applicable for Canada and US CSA Class: 5318-01 (Canada), 5318-81 (USA) Temperature Code: T3 Groups: A, B, C and D
Marine (DNV)	DNV DNV.COM/AF	DNV Certificate DNV Type approved product Certificate: TAA00001ST
Marine (ABS)	ABS	ABS Design Assessment Certificate ABS (American Bureau of Shipment) assessed product Certificate: 22-2231447-PDA
UL 1989 (UZK12.261)	UL	Vendor Certificate Standard for Standby Batteries UL94: HB
VDMA 24364	LABS VDMA 24364-C1-L/W	Paint Wetting Impairment Substances Test (or LABS-Test) Tested for Zone 2 and test class C1 according to VDMA 24364-C1-L/W for solvents and water-based paints

11. REGULATORY PRODUCT COMPLIANCE

EU Declaration of Conformity	CE	The CE mark indicates conformance with the - EMC directive - ATEX directive - RoHS directive
REACH Regulation (EU)	REACH COMPLIANT	Manufacturer's Statement EU regulation regarding the Registration, Evaluation, Authorisation and Restriction of Chemicals (REACH) fulfilled.
WEEE Regulation		Manufacturer's Declaration EU Regulation on Waste Electrical and Electronic Equipment Registered as business to business (B2B) products. EU Regulation 2012/19/EU

12. PHYSICAL DIMENSIONS AND WEIGHT

Width	214mm	
Height	179mm	
Depth	153mm	
Weight	10.1kg	For UZK12.261
	700g	For UZO12.26
Bracket material	Zinc-plated steel	

Fig. 12-1 **Top view**

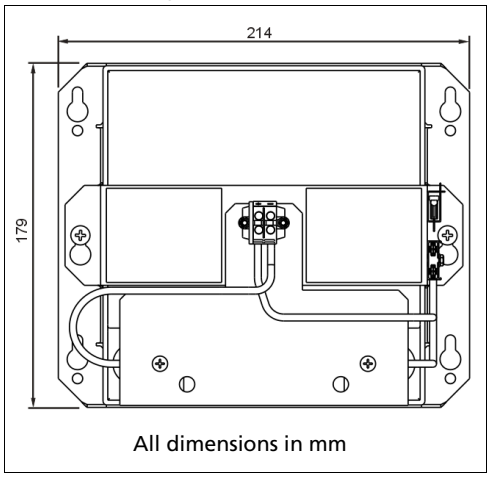

Fig. 12-2 **Side view**

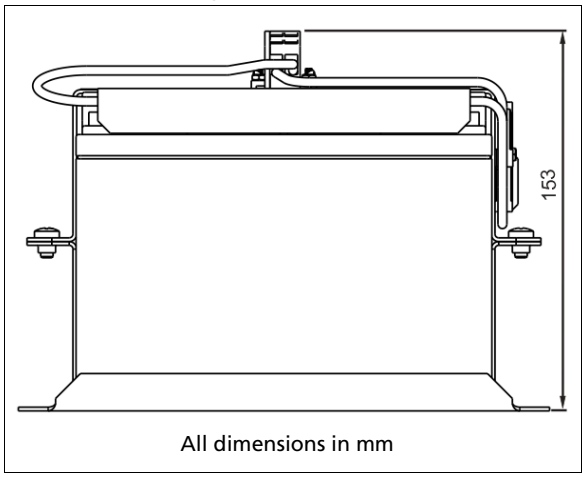

Fig. 12-3 **Isometric view**

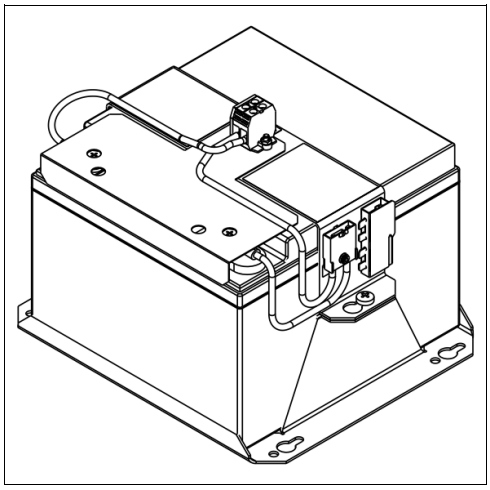

Fig. 12-4 **Hole pattern for wall mount**

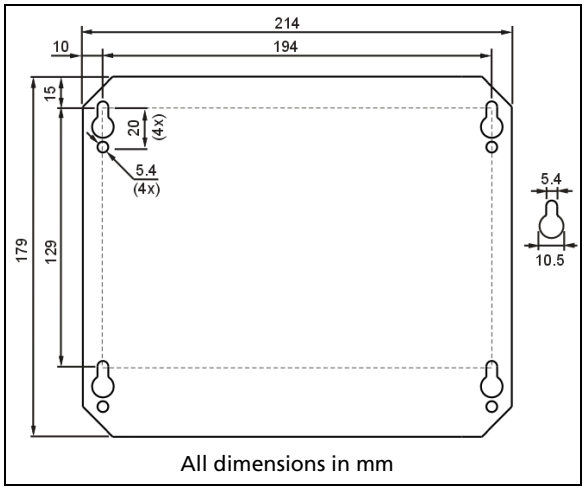

13. RECOMMENDATIONS FOR A LONG BATTERY LIFE

Temperature:

The temperature has the most impact on the service life. The hotter the temperature, the earlier the wear-out phase of the battery begins. The wear-out results in a degradation of battery capacity. Place the battery module in a cool location, e.g. near the bottom of the control cabinet. Do not place the battery module near heat generating devices. Do not overcharge batteries!

Fig. 13-1 **Service life (according to EUROBAT) vs. ambient temperature, typ.**

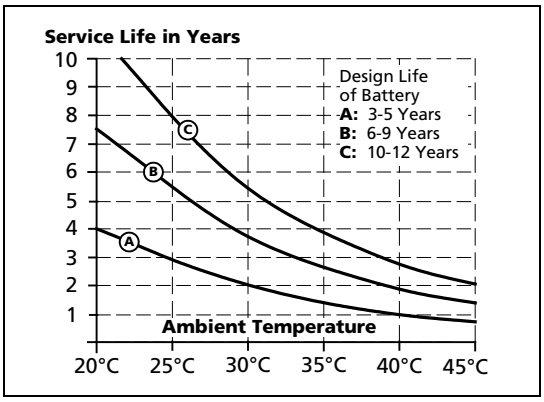

Number of discharge cycles and depth of discharge:

Do not discharge batteries more than necessary. Set buffer time limiter to the required buffer time. The number, as well as the depth of discharging cycles is limited. A replacement of the battery might be necessary earlier.

When choosing the battery capacity, always try to get the next higher capacity than required. The depth of discharge reduces the service life of the battery and limits the number of cycles.

Fig. 13-2 **Battery degradation vs. discharging cycles, typ.**

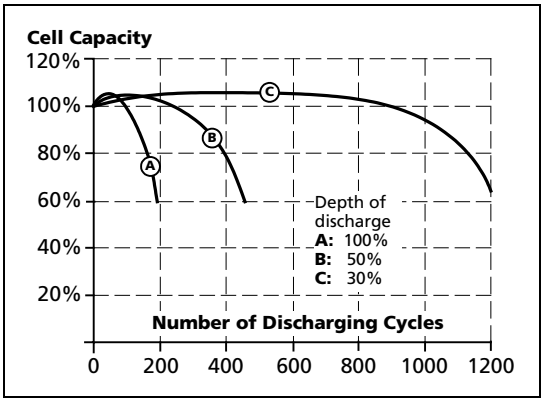

Store batteries fully charged

Do not store discharged batteries. Keep batteries fully charged!

Charge retention is important to get the longest battery life. Stored batteries which are not fully charged age faster then charged batteries. Batteries which are not in use should be recharged at least once a year. The higher the ambient temperature, the shorter the charging interval. At storage temperatures higher than 30°C, recharging should be done at least every nine months.

14. MOUNTING ORIENTATIONS

The standard mounting orientation is the vertical installation onto a flat surface.

Fig. 14-1 **Standard mounting orientation**

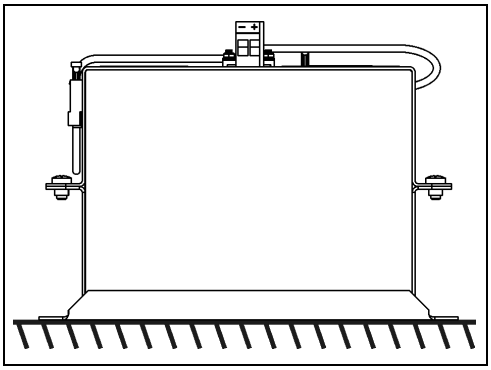

The following mounting orientations are also allowed:

Fig. 14-2 **Allowed mounting orientations**

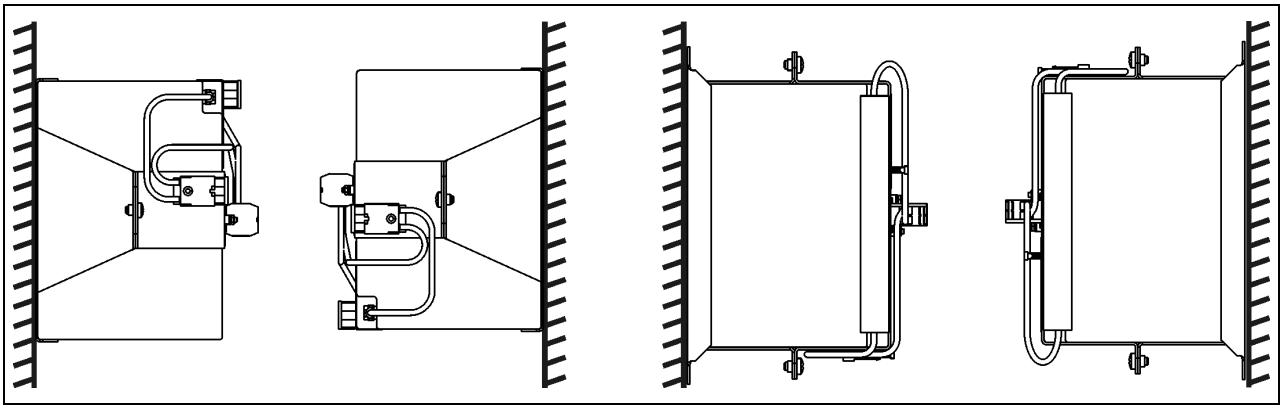

Do not use the battery module in an upside down position:
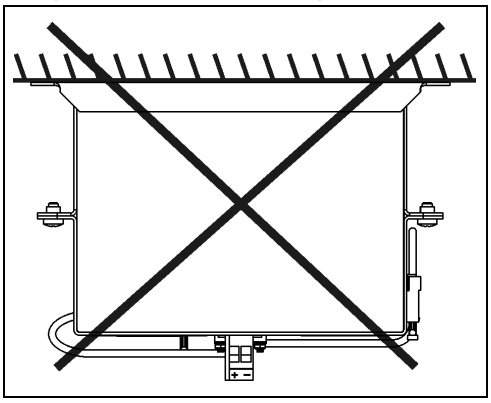
Fig. 14-3 **Forbidden mounting orientation**